Architectural Issues
— Cascade Control
(控制结构问题 — 级联控制设计)

Cascade Control

- **Motivations (动机)**
  - The previous controller design only uses output feedback and is often required to meet conflicting requirements such as the high open loop gain for small sensitivity values for good disturbance rejection capability and the low open-loop gain for small complementary values for good noise attenuation capability and robust stability in the presence of modeling errors, which often leads to difficult design trade-offs; One-stone-two-birds problem is always hard to solve (之前的控制器设计只使用输出反馈，通常需要满足相互冲突的需求,如存在建模错误时采用高开环增益可获得小灵敏度值，从而具有良好的抗干扰能力；但同时需采用低开环增益以获得小互补灵敏度值，从而具有良好的噪声衰减能力和鲁棒稳定性，这通常会导致设计平衡困难;一石二鸟的问题总是很难解决) .

Cascade Control

– If additional feedback information (e.g., current feedback in motor driven EM systems) is available, then, one might be able to close an inner loop first to focus only on a particular local problem such as disturbance attenuation. By doing so, the overall controller design may not have to make hard trade-offs as in the previous SISO designs to simplify the designs (e.g., the usual motor amplifier employs local current feedback loop to make the electrical dynamics so fast that we do not have to consider them in the design of overall controller for drive systems like the ECP emulator). The idea is also illustrated by the following example.(如果额外的反馈信息(例如电机驱动中电磁系统的电流反馈)可用，那么可以先关闭一个内部环路，只关注如干扰抑制等特定的局部问题。通过这样做，整个控制器的设计可能不用像前面的SISO设计那样需要艰难的权衡来简化设计(例如通常电机放大器采用局部电流反馈回路，使得电动力学响应非常快，这样使得我们在设计电机传动系统的整体控制器时不必考虑这些因素)。下面的示例也说明了这一思想)

Cascade Control

- **Close a Fast (High-Gain) Inner Loop for Effective Attenuation of Disturbances** (关闭快速(高增益)内环以有效抑制干扰)

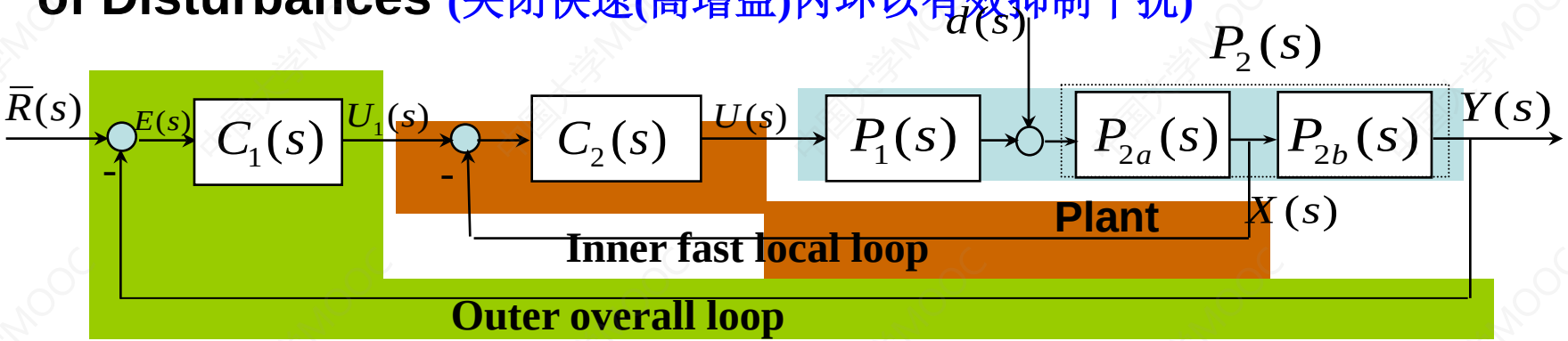

- **Inner Fast Local Loop** (内部快速局部环路)
  - Synthesize $C_2(s)$ to achieve a high CL bandwidth from $U_1(s)$ to $X(s)$ (设计$C_2(s)$以实现从$U_1(s)$到$X(s)$的高闭环带宽)

For a large frequency range (在较大的频率范围内)

$S_2(j\omega)\approx 0,\ T_2(j\omega)\approx 1$

$\Rightarrow$

$$X(s) = S_2(s)P_{2a}(s)d(s) + T_2(s)U_1(s)$$

Cascade Control

- **Simplified Outer Loop Design** (简化的外环设计)

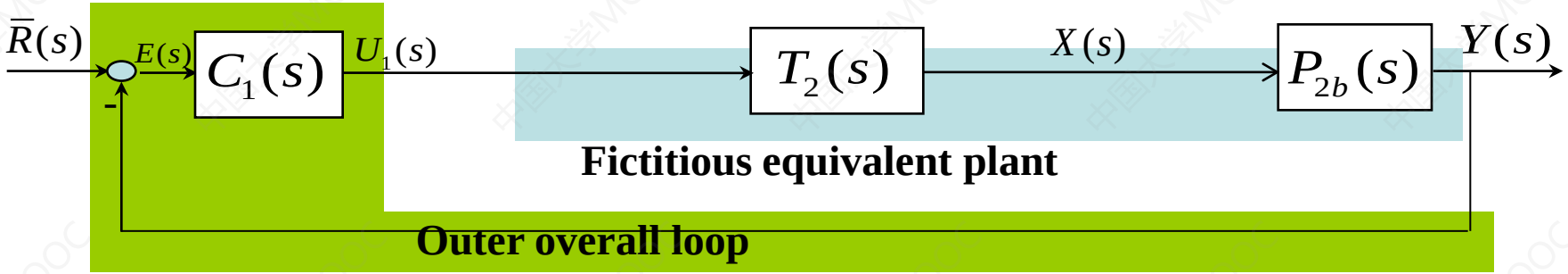

For a large frequency range (在较大的频率范围内)

$S_2(j\omega)\approx 0,\ T_2(j\omega)\approx 1$

Example - Control of Gantry-Crane System

- **System Dynamics**

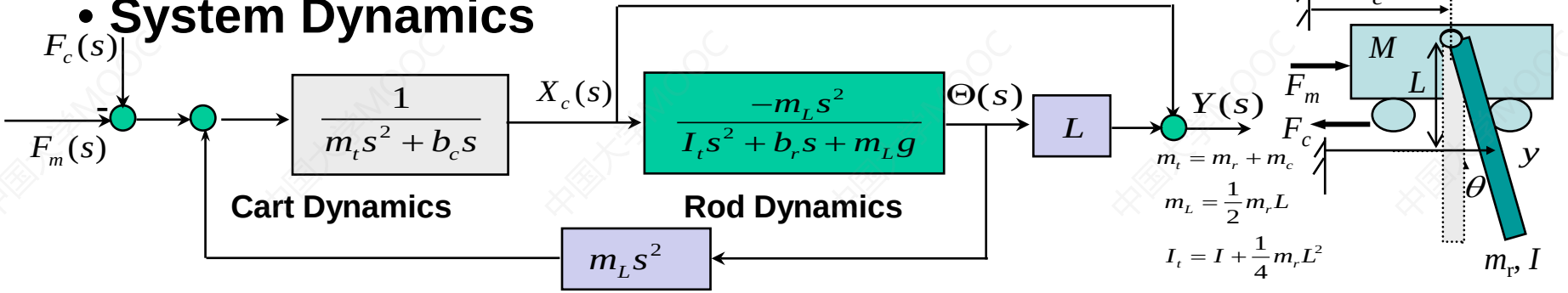

$$m_t = m_r + m_c$$

$$m_L = \frac{1}{2} m_r L$$

$$I_t = I + \frac{1}{4} m_r L^2$$

$$\Updownarrow$$

$$X_c(s) = \frac{1}{m_t s^2 + b_c s}[F_m(s) - F_c(s) + m s^2 \Theta(s)]$$

$$\Theta(s) = \frac{-m_L s^2}{I_t s^2 + b_r s + m_L g} X_c(s)$$

$$Y(s) = X_c(s) + L\Theta(s)$$

$$\Rightarrow \quad Y(s) = \frac{(I_t - m_L L)s^2 + b_r s + m_L g}{I_t s^2 + b_r s + m_L g} X_c(s)$$

$$\Theta(s) = \frac{1}{L}[Y(s) - X_c(s)]$$

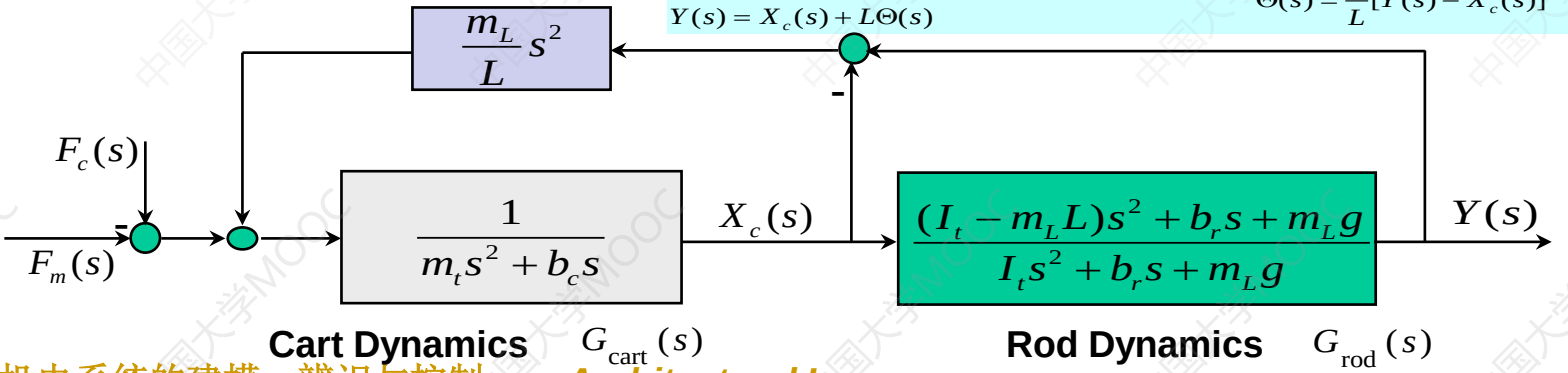

Example - Control of Gantry-Crane System

- **Two loop controller design**（双回路控制器设计）

➢ **Fast local inner loop design for good friction rejection**(有良好的摩擦抑制效果的快速局部内环设计)

Inner OL plant: $P_2(s)=\dfrac{1}{1.14(s^2+4.56s)}$

CL poles of Inner-loop control (C2(s)):

Inner controller: $C_2(s)=\dfrac{b_2s^2+b_1s+b_0}{s(s+a_0)}=\dfrac{2343.81s^2+36479.7s+1.82e5}{s(s+74.44)}$

$p_{CLd1,2,3,4}=-20$

➢ **Outer loop design for good reference tracking**(便于跟踪参考输入的外环设计)

outer plant: $P_1(s)=\dfrac{-0.47(s-7)(s+6.9)}{(s+0.024)^2+4.76^2}=\dfrac{-0.47s^2+0.047s+22.7}{s^2+0.048s+22.66}$

CL poles of Outer-loop control (C2(s)):

outer controller: $C_1(s)=\dfrac{0.9676s-46.799}{s^2+17.4s+74}$

$p_{CLd1,2}=-3.5\pm3.5j,\ \ p_{CLd3,4}=-5$

➢ **Feedforward design for improving transient performance**（改善瞬态性能的前馈设计）

CL plant: $CLTF\quad T=\dfrac{-0.4548(s+6.9)(s-7)(s+48.366)}{((s+3.5)^2+3.5^2)(s+5)^2}$

$F(s)=\dfrac{-3.988}{(s+6.9)}$

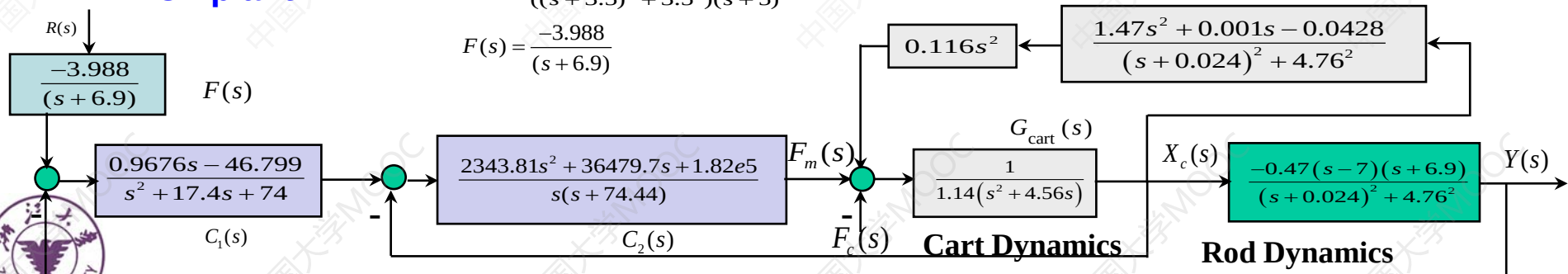

Summary

- **Cascade Control with Additional Feedback Information (增加反馈信息的级联控制)**
  - A Special Class of Partial State Feedback Controllers (一类特殊的部分状态反馈控制器)